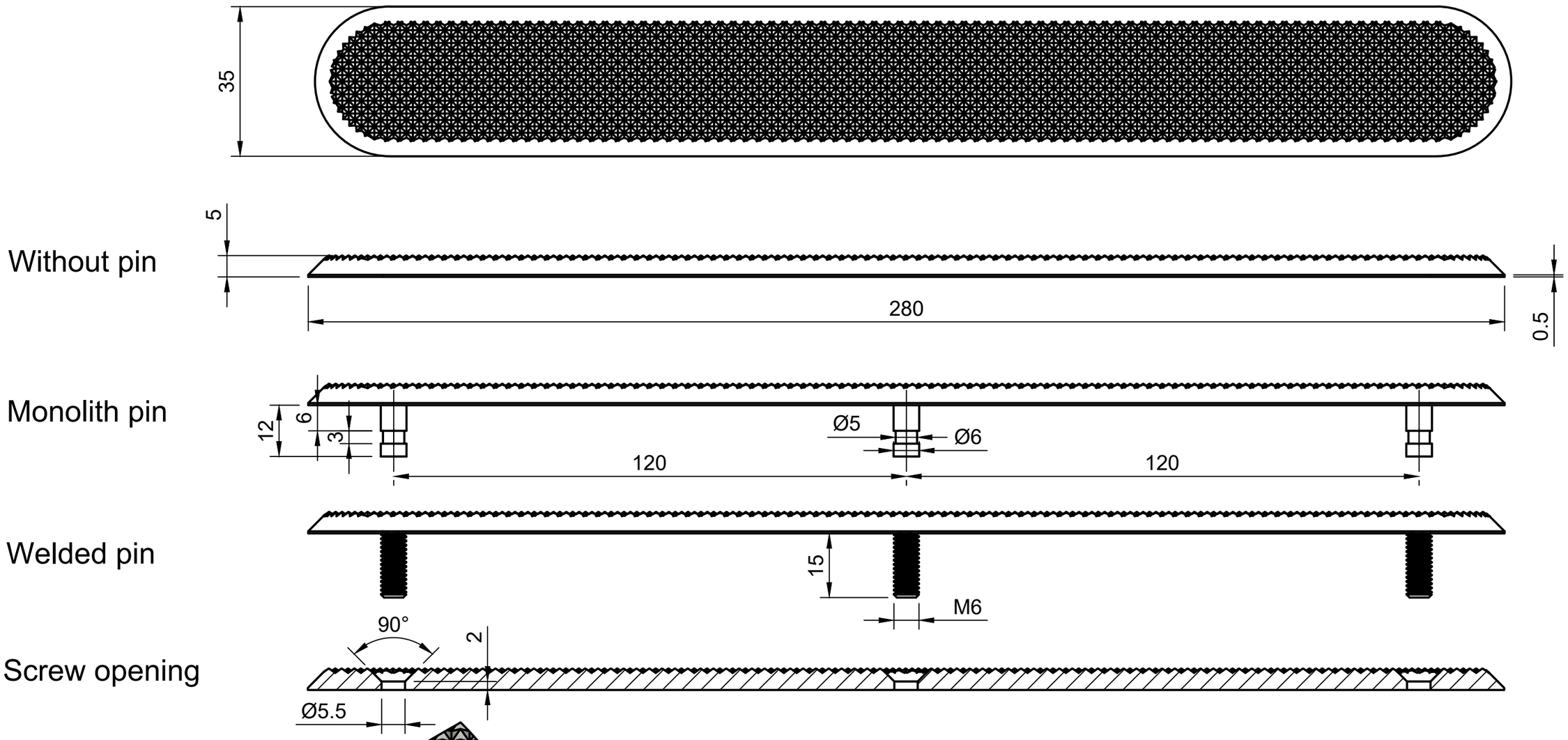

Detail B

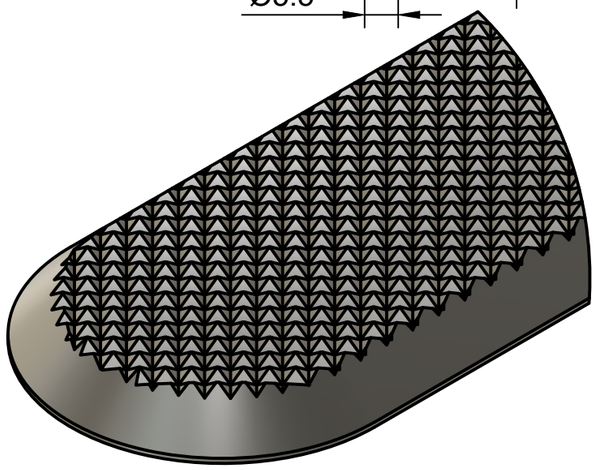

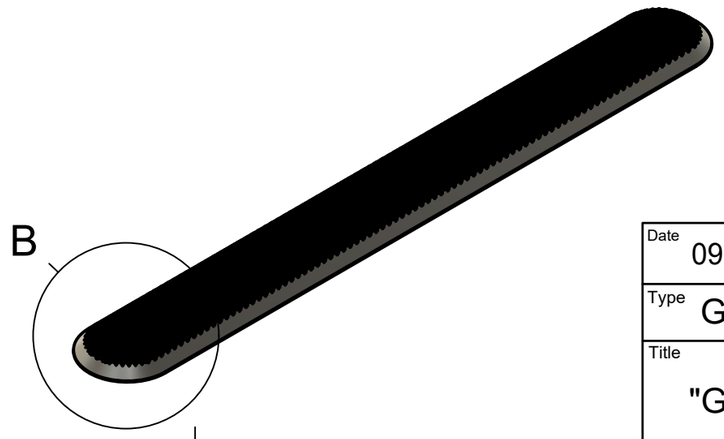

Date 09.02.2025	General tolerances ISO 2768-mK	
Type GD	Scale 1:1	Size A3
Title "GD_35x280x5"	Tactilo tomas@tactilo.co +421 917 373 508	